YK900XGP

Dust-proof & drip-proof type

● Arm length 900mm ● Maximum payload 20kg

Ordering method

YK900XGP	-	-	F	-	-	RCX340-4	-	-	-	-	-	-	-	
Model	-	Z axis stroke	-	Tool flange	-	Cable	-	Controller / Number of controllable axes	-	Safety standard	-	Option A (OP.A)	-	Option B (OP.B)	-	Option C (OP.C)	-	Option D (OP.D)	-	Option E (OP.E)	-	Absolute battery
		200: 200mm 400: 400mm		F: With tool flange		3L: 3.5m 5L: 5m 10L: 10m																

Specify various controller setting items. RCX340 ▶ P.636

Specifications

			X-axis	Y-axis	Z-axis		R-axis
Axis specifications	Arm length		500 mm	400 mm	200 mm	400 mm	–
	Rotation angle		+/-130 °	+/-150 °	–		+/-360 °
AC servo motor output			750 W	400 W	400 W		200 W
Deceleration mechanism	Transmission method	Motor to speed reducer	Direct-coupled				
		Speed reducer to output	Direct-coupled				
Repeatability Note 1			+/-0.02 mm		+/-0.01 mm		+/-0.004 °
Maximum speed			9.9 m/sec		2.3 m/sec	1.7 m/sec	920 °/sec
Maximum payload			20 kg				
Standard cycle time: with 2kg payload Note 2			0.59 sec				
R-axis tolerable moment of inertia Note 3			1.0 kgm²				
Protection class Note 4			Equivalent to IP65 (IEC 60529)				
User wiring (sq × wires)			0.2 × 20				
User tubing (Outer diameter)			ϕ 6 × 3				
Travel limit			1.Soft limit 2.Mechanical stopper (X,Y,Z axis)				
Robot cable length			Standard: 3.5 m Option: 5 m, 10 m				
Weight			Z axis 200 mm: 58 kg Z axis 400 mm: 60 kg				

Note 1. This is the value at a constant ambient temperature. (X,Y axes)
Note 2. When reciprocating 25mm in vertical direction and 300mm in horizontal direction (rough-positioning arch motion).
Note 3. The acceleration coefficient is set automatically in accordance with the tip weight and R-axis moment of inertia settings.
Note 4. Do not use robots where the bellows section is directly exposed to water jet. Contact our distributor for information on drip-proof structure preventing liquid other than water.

Controller

Controller	Power capacity (VA)	Operation method
RCX340	2500	Programming / I/O point trace / Remote command / Operation using RS-232C communication

Note. The movement range can be limited by changing the positions of X and Y axis mechanical stoppers. (The movement range is set to the maximum at the time of shipment.)
See our robot manuals (installation manuals) for detailed information.
Note. To set the standard coordinates with high accuracy, use a standard coordinate setting jig (option). Refer to the user's manual (installation manual) for more details.

Our robot manuals (installation manuals) can be downloaded from our website at the address below:
https://global.yamaha-motor.com/business/robot/

YK900XGP

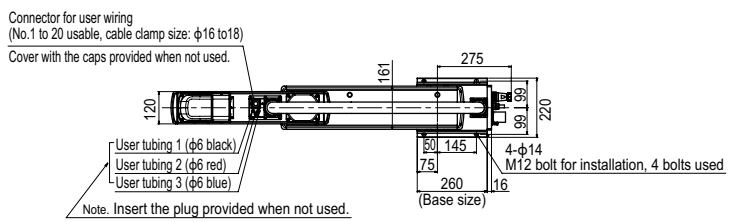

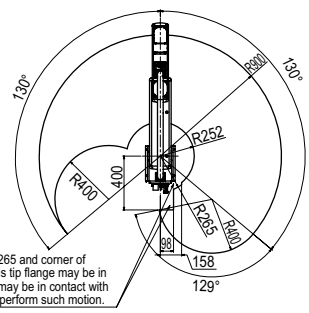

Working envelope of left-handed system

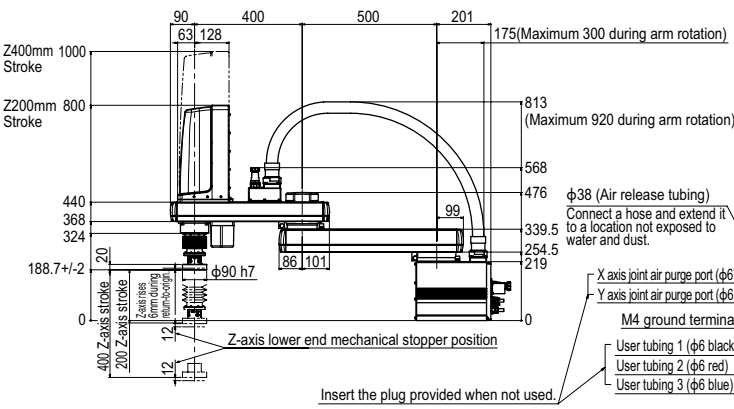

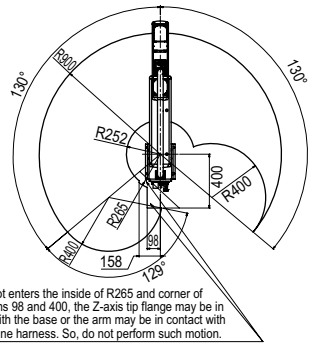

Working envelope of right-handed system

- Note that the robot cannot be used at a position where the base flange, robot cable, spline, and bellows interfere with each other in the working envelope shown above.
- X-axis mechanical stopper position : 132°
- Y-axis mechanical stopper position : 152°

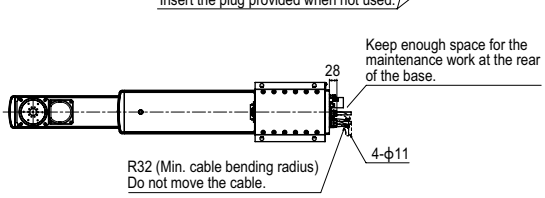

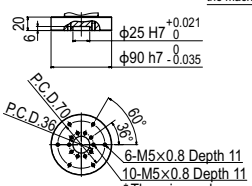

* There is no phase relation between each position of M5 tapped holes and R-axis origin position.

Z axis tip shape