YK500XGLP

Dust-proof & drip-proof type

● Arm length 500mm ● Maximum payload 4kg

Ordering method

YK500XGLP	150		S		RCX340-4							
Model	Z axis stroke	Tool flange	Hollow shaft	Cable	Controller / Number of controllable axes	Safety standard	Option A (OP.A)	Option B (OP.B)	Option C (OP.C)	Option D (OP.D)	Option E (OP.E)	Absolute battery
	150: 150mm	No entry: None F: With tool flange	S: With hollow shaft	3L: 3.5m 5L: 5m 10L: 10m								

Specify various controller setting items. RCX340 ▶ P.636

Specifications

			X-axis	Y-axis	Z-axis	R-axis
Axis specifications	Arm length		250 mm	250 mm	150 mm	–
	Rotation angle		+/-129 °	+/-144 °	–	+/-360 °
AC servo motor output			200 W	150 W	50 W	100 W
Deceleration mechanism	Transmission method	Motor to speed reducer	Direct-coupled			
		Speed reducer to output	Direct-coupled			
Repeatability Note 1			+/-0.01 mm		+/-0.01 mm	+/-0.004 °
Maximum speed			5.1 m/sec		1.1 m/sec	1020 °/sec
Maximum payload			4 kg			
Standard cycle time: with 2kg payload Note 2			0.66 sec			
R-axis tolerable moment of inertia Note 3			0.05 kgm^2			
Protection class Note 4			Equivalent to IP65 (IEC 60529)			
User wiring			0.2 sq × 10 wires			
User tubing (Outer diameter)			ϕ 4 × 4			
Travel limit			1.Soft limit 2.Mechanical stopper (X,Y,Z axis)			
Robot cable length			Standard: 3.5 m Option: 5 m, 10 m			
Weight			25 kg			

Note 1. This is the value at a constant ambient temperature. (X,Y axes)
Note 2. When reciprocating 25mm in vertical direction and 300mm in horizontal direction (rough-positioning arch motion).
Note 3. The acceleration coefficient is set automatically in accordance with the tip weight and R-axis moment of inertia settings.
Note 4. Do not use robots where the bellows section is directly exposed to water jet. Contact our distributor for information on drip-proof structure preventing liquid other than water.

Controller

Controller	Power capacity (VA)	Operation method
RCX340	1000	Programming / I/O point trace / Remote command / Operation using RS-232C communication

Note. The movement range can be limited by changing the positions of X and Y axis mechanical stoppers. (The movement range is set to the maximum at the time of shipment.)
See our robot manuals (installation manuals) for detailed information.
Note. To set the standard coordinates with high accuracy, use a standard coordinate setting jig (option). Refer to the user's manual (installation manual) for more details.

Our robot manuals (installation manuals) can be downloaded from our website at the address below:
https://global.yamaha-motor.com/business/robot/

YK500XGLP

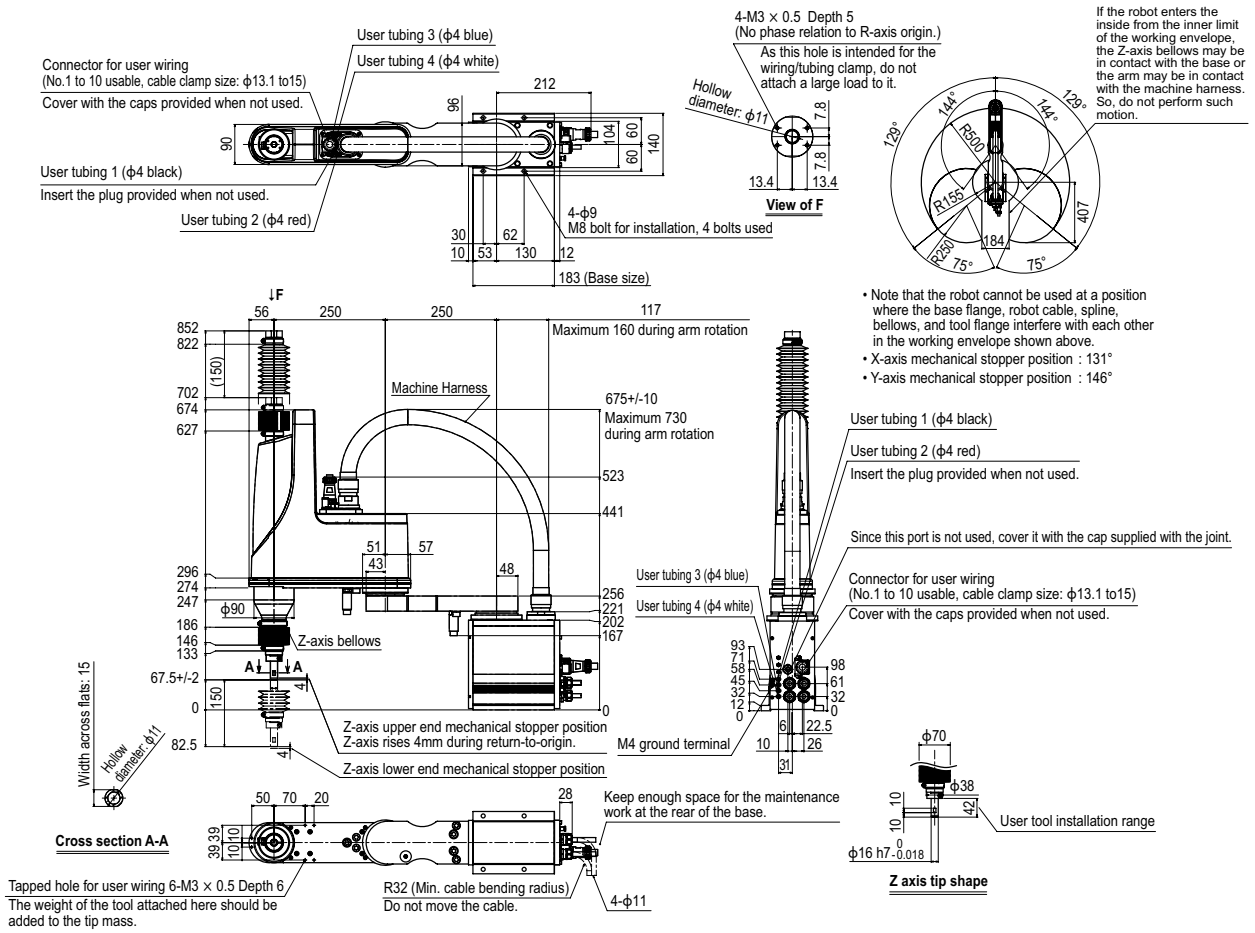

Controller RCX340 ▶ 636
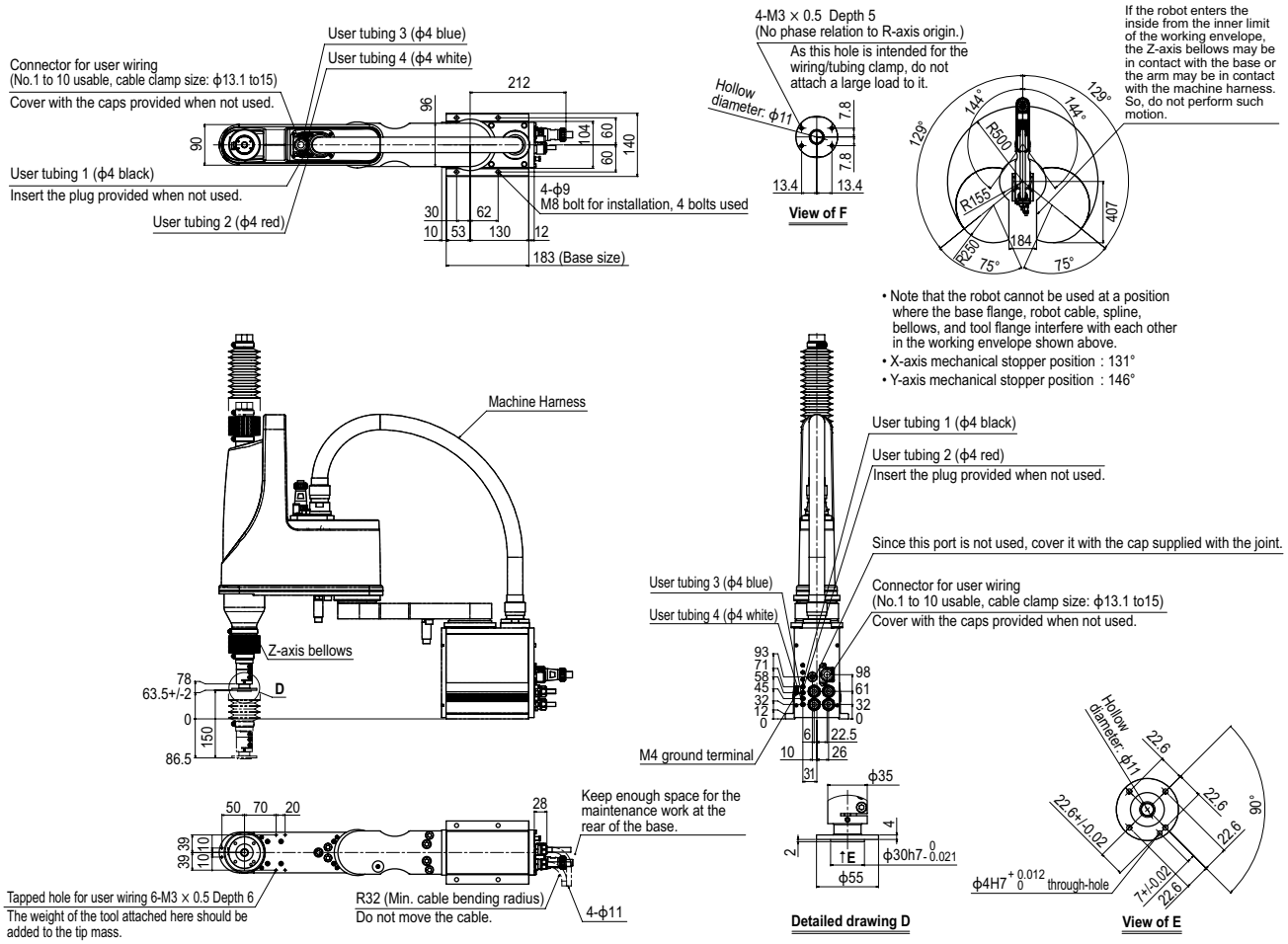
YK500XGLP Tool flange mount type